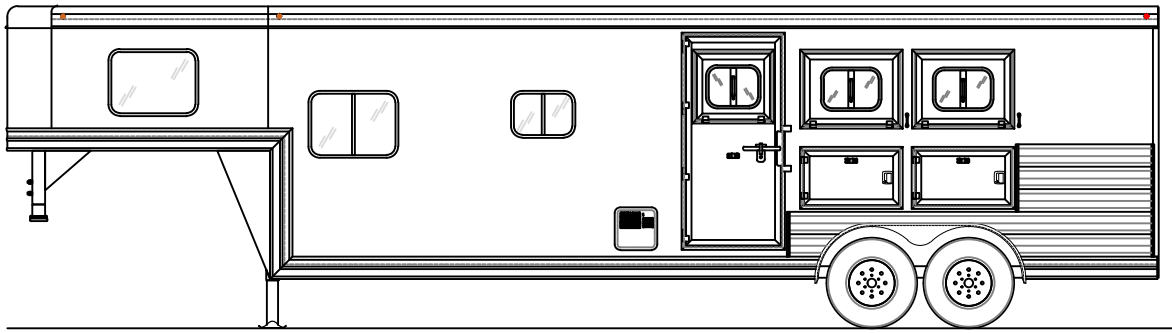

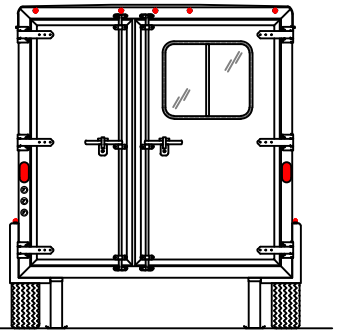

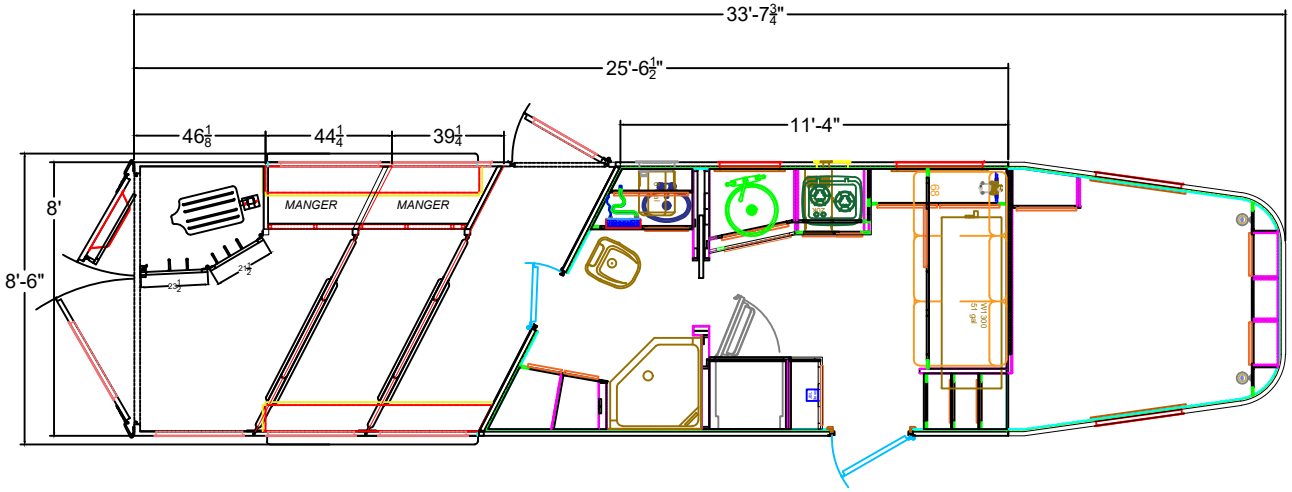

CH8311SR

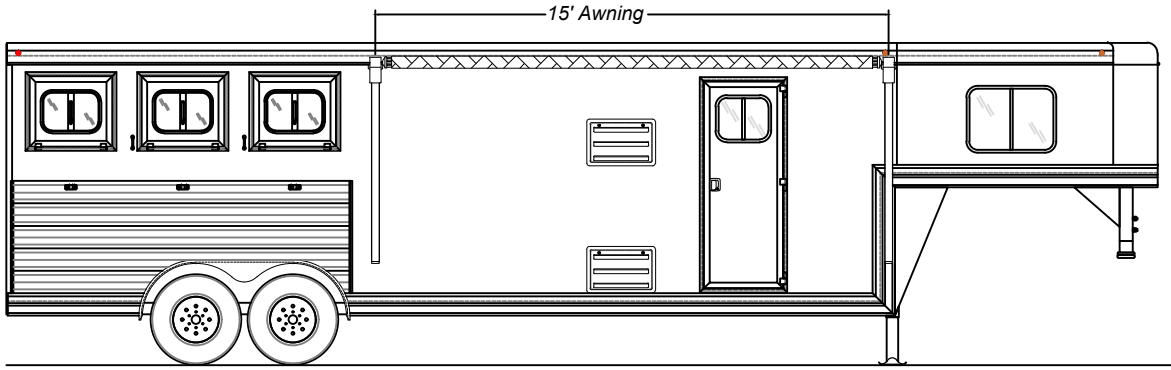

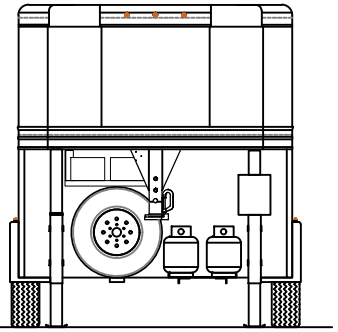

STRUCTURE NOTES	Lakota Trailers	MODEL(S): Charger CH8311SR
Optional Drop Butt Windows Optional Horse Area Slat	PROPRIETARY AND CONFIDENTIAL THE INFORMATION CONTAINED IN THIS DRAWING IS THE SOLE PROPERTY OF LAKOTA. ANY REPRODUCTION IN PART OR IN WHOLE WITHOUT THE WRITTEN PERMISSION OF LAKOTA IS STRICTLY PROHIBITED.	TITLE: CH8311SRSales DATE: 12/10/24 DRAWN BY: TB